Dare to be different.
Ideal Standard

Design is in our DNA.

And we believe it is in yours too.
Let your personal taste and your sense of style
speak out with our new silk black finish.
Black embodies sophistication
and elevates any room in an instant,
whether you aim to fully transform
your space with a bold design
or create visual contrast by adding
only a touch of black.
Our wide choice of products – from
basins, toilets and furniture to shower trays,
enclosures and accessories – will
offer you seemingly endless opportunities
for self-expression.

Be your own trendsetter.

Dare to be different.

Ideal Standard

Bringing your creative vision to life.

IDEAL STANDARD OFFERS COMPLETE BATHROOM SOLUTIONS. FROM MIXERS, TAPS AND SHOWER SYSTEMS TO BASINS, TOILETS AND BATHROOM FURNITURE. BEAUTIFULLY DESIGNED, CAREFULLY COORDINATED, AND PRODUCED TO THE HIGHEST QUALITY STANDARDS.

Ideal Standard

Ideal Standard

Inspiration 8

Mixers & Taps 20
- Ceraline 22
- Cerafine O & Tonic II 26

Basins, Toilets and Furniture 36
- Tesi 38
- Connect Air 40

Showering 50
- Ceratherm T & Idealrain 52
- Ultra Flat S 64
- Connect 2 68

OUR SELECTION

Cerafine O Grande Basin Mixer - BC554XG
Tesi Vanity 80cm - T3509V3
Tesi Basin Unit 80cm - T0051ZT
Mirror with Sensor Light & Anti-Steam 80cm - T3347BH
Tesi Wall-Hung Toilet AquaBlade - T3546V3
Tesi Slim Seat & Cover, Slow Close - T3527V3
Tesi Wall-Hung Bidet - T3552V3
Cerafine O Bidet Mixer - BC705XG
Altes Flush Plate - Black Ceramic - R0130A6
IOM Towel Rail 45cm - A9117XG

Leave the ordinary behind with an all-black bathroom design

TO CREATE AN INTIMATE, ELEGANT AND SMART ATMOSPHERE, CHOOSE THE ALL-BLACK INTERIOR DESIGN APPROACH.

We have carefully selected some of the most popular models from our portfolio and are now offering them in silk black.

BLACK NEVER GOES OUT OF FASHION.

The dark hue is an elegant choice that will bring effortless style and sophistication to your bathroom design.

OUR SILK BLACK COLLECTIONS ARE NOT ONLY A STYLE STATEMENT, THEY ARE ALSO INTELLIGENTLY DESIGNED TO MEET OUR CUSTOMERS' EVERYDAY NEEDS.

The products are fitted with Ideal Standard's most innovative technologies such as the FirmaFlow® ceramics disc cartridge and AquaBlade® flush technology.

OUR SELECTION

Ceraline Vessel Mixer - BD365XG
Strada II Round Vessel 45cm - E237901
Strada II Ceramic Waste Cover (to be used with freeflow waste) - T854601
Adapto Console 120cm - Light Wood - U8409FF
Adapto Storage Unit x 2 50cm - Light Wood - U8421FF
Contemporary Bottle Trap - T4441XG
Mirror with Ambient Light 120cm - T3338BH
Strada II Wall-Hung Toilet AquaBlade - T299701
Strada II Slim Toilet Seat & Cover, Slow Close - T385701
Altes Flush Plate - White Ceramic - R0130AC
Strada II Wall-Hung Bidet - T297101
Ceraline Bidet Mixer - BC197XG
Dea Freestanding Bath Tub 190cm - E306801
Tonic II Freestanding Bath & Shower Mixer - A6347XG

Combine silk black with soft white for a graphic modern interior.

MIX AND MATCH OUR SILK BLACK PRODUCTS WITH IDEAL STANDARD'S WELL-KNOWN WHITE CERAMIC COLLECTIONS TO CREATE A CONTEMPORARY AND HARMONIOUS LOOK.

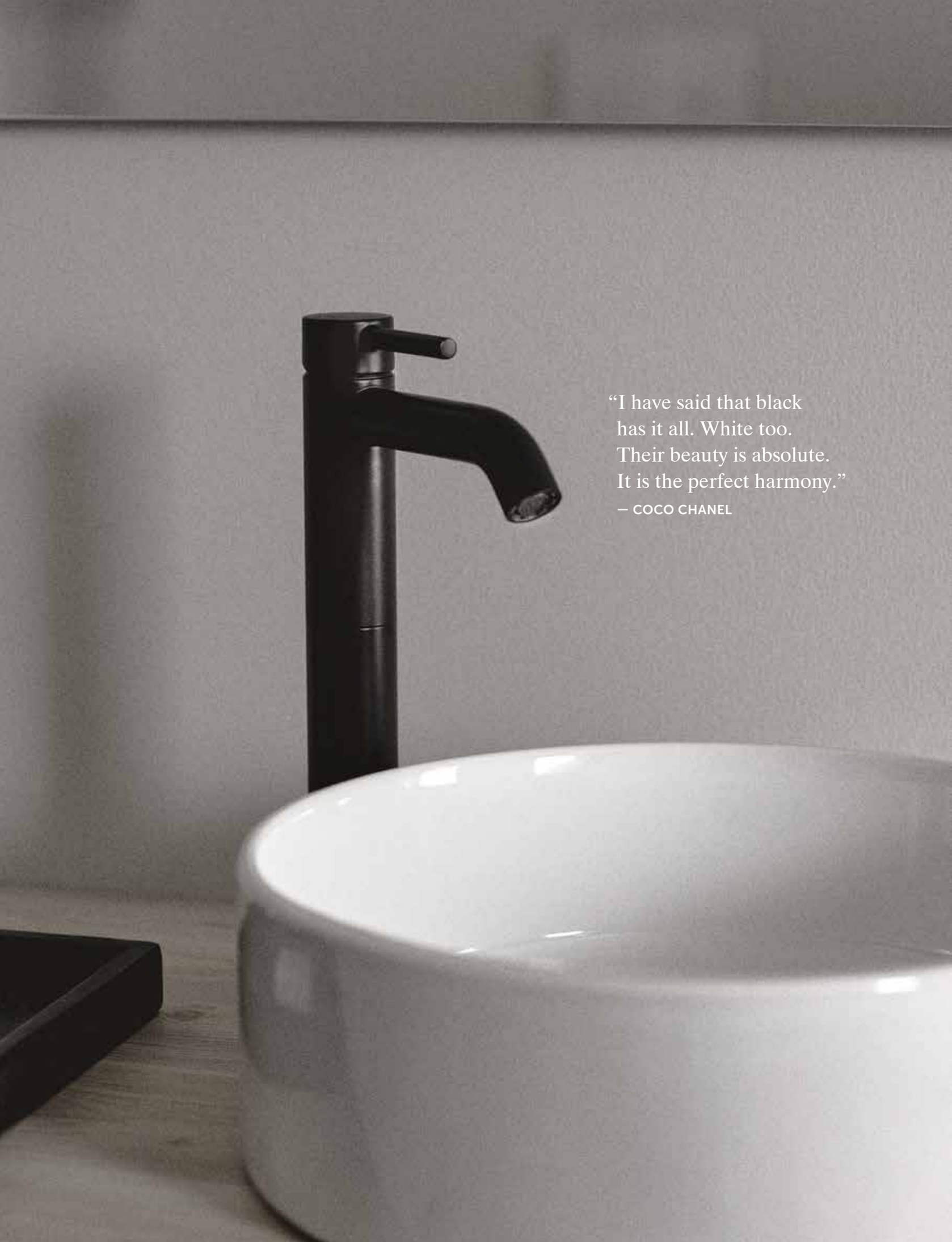

"I have said that black
has it all. White too.
Their beauty is absolute.
It is the perfect harmony."
— COCO CHANEL

OUR SELECTION

Cerafine O Built-in Basin Mixer - BD133XG
Strada II Rectangular Vessel 60x40cm - E237301
Strada II Ceramic Waste Cover (to be used with freeflow waste) - T854601
Adapto Console 120cm - Light Wood - U8409FF
Adapto Storage Unit x 2 50cm - Light Wood - U8421FF
Contemporary Bottle Trap - T4441XG
Mirror with Ambient Light 120cm - T3338BH

Mixers and taps

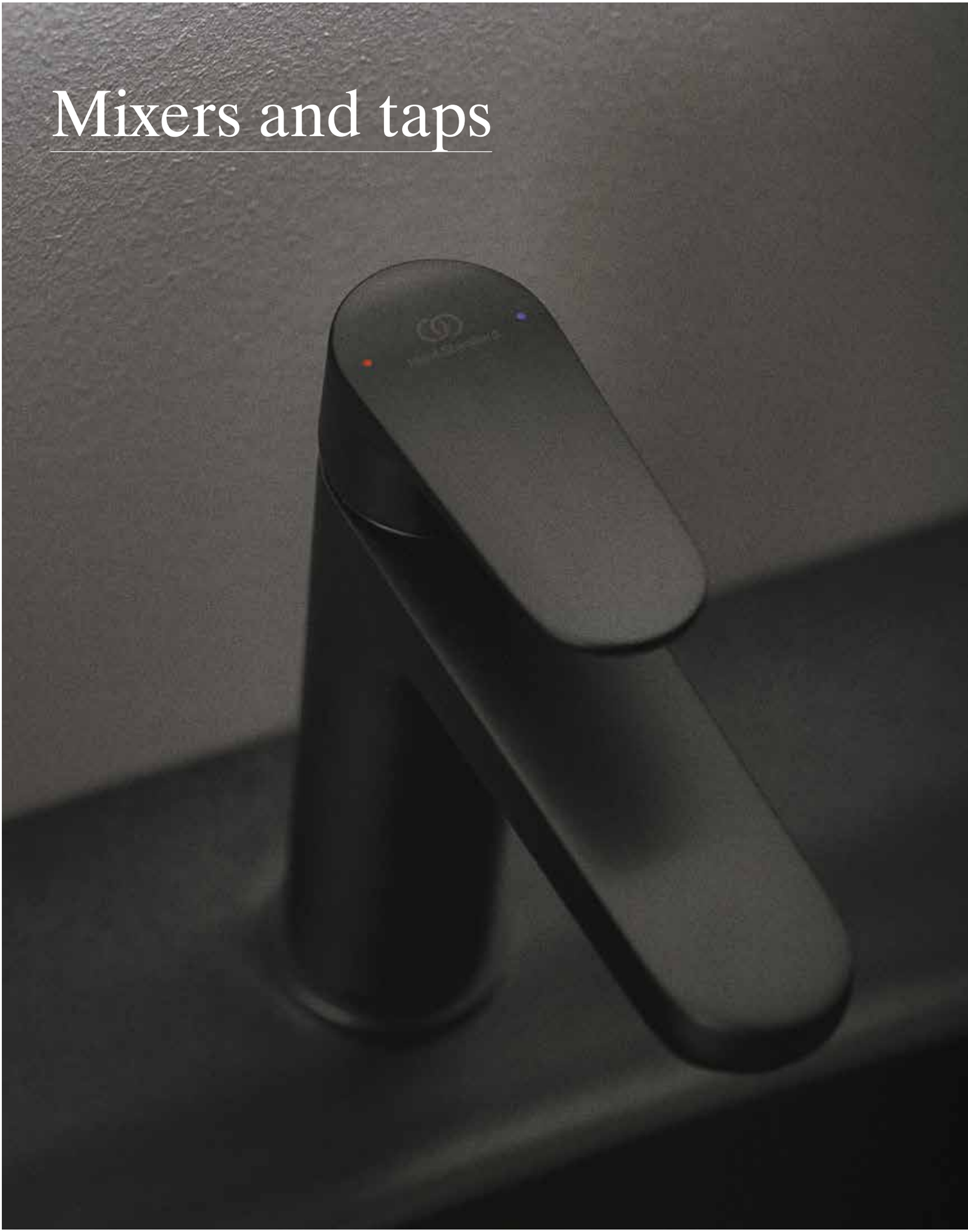

THE BATHROOM IS SUCH AN IMPORTANT PART OF THE HOUSE – A PLACE TO RELAX, TO PREPARE FOR THE DAY. WITH A CHOICE ACROSS DIFFERENT RANGES, YOU CAN CREATE A SPACE THAT ACHIEVES EVERYTHING YOU NEED.

Ceraline Vessel Mixer - BD365XG
Strada II Round Vessel 45cm - E237901
Strada II Ceramic Waste Cover (to be used with freeflow waste) - T854601

Ceraline

CLEAN LINES AND GENTLE ARCS COATED IN SILKY BLACK

With soft geometries and an organic, cylindrical shape Ceraline offers a timeless design. Drawing inspiration from Scandinavian styling, it's going to bring simple, minimalist beauty to your space. The silk black finish makes this a bolder choice, but combined with natural materials and softer hues you achieve a perfect balance. Designed for everyday living, the higher spout brings comfort and convenience.

Ceraline Bidet Mixer - BC197XG
Ceraline Built-in Basin Mixer - A6938XG

OUR SELECTION

Ceraline Built-in Basin Mixer - A6938XG
Connect Air Rectangular Vessel 60x40cm - E034801
Adapto Console 120cm - Light Wood - U8409FF
Adapto Storage Unit x 2 50cm - Light Wood - U8421FF
Contemporary Bottle Trap - T4441XG
Mirror with Ambient Light 120cm - T3338BH

Mini Mixer

Basin mixer

Vessel mixer

Wall Mounted Basin Mixer

Dual Control Bath Filler

Dual Control
Bath Shower Mixer

Bidet mixer

Cerafine O Built-in Basin Mixer - BD133XG
Strada II Rectangular Vessel 60x40cm - E237301
Strada II Ceramic Waste Cover (to be used with freeflow waste) - T854601

Cerafine O & Tonic II

A STRONG DESIGN SOFTENED BY ROUNDED SHAPES

For those looking to add a touch of extravagance to their project, Cerafine O is the collection that is sure to make a statement in your home. Combined with crisp white ceramics or with all black ones, the silk black taps and mixers will stand out for all the right reasons.

Cerafine O Basin Mixer - BC136XG
Cerafine O Bidet Mixer - BC705XG

Tonic II Freestanding Bath & Shower Mixer - A6347XG
Dea Freestanding Bath Tub 190cm - E306801

Mini Basin Mixer

Basin Mixer

Wall Mounted Basin Mixer

Dual Control Bath Filler

Freestanding bath
shower mixer

Dual Control
Bath Shower Mixer

Bidet mixer

FirmaFlow®

HIDDEN BRILLIANCE SINCE 1969

We pioneered the ceramic disc cartridge in 1969. This innovation redefined the way people used bathrooms and made it possible to create the single lever tap. As the ultimate development of the original ceramic disk cartridge, some 50 years on, FirmaFlow® is undisputed market leader with its innovative engineering and extraordinary powers of durability, comfort and control are achieved for twice as long as the industry standard.

ECOFLOW REGULATOR

WATER IS A PRECIOUS RESOURCE.
SAVE WATER WITH ECOFLOW.

Our Eco Flow regulator reduces the water consumption down to 5L/min, without compromising on comfort.

LIGHTMOVE

SUPERIOR PINPOINT PRECISION OVER WATER TEMPERATURE.

The FirmaFlow cartridge enables finer temperature adjustments between 34°C and 42°C. Precision is paramount with LightMove®, improving tap handle usability, whilst the in-built hot water limiter makes scalding a thing of the past.

EASYFIX INSTALLATION

EASY AND FAST
TO INSTALL.

EasyFix makes installation simple with its reliability reducing maintenance and cutting installation time by 30%.

MINI BASIN MIXER

MODEL	SKU
Single lever mini basin mixer	BC185XG

- EasyFix® system
- Slim aerator
- FirmaFlow® ceramic disc cartridge 28mm
- Temperature limiter
- Supplied with flexible hoses
- Comfort area: Height 60mm

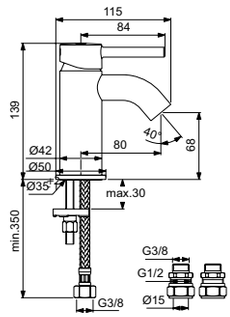

BASIN MIXER

MODEL	SKU
Single lever basin mixer	BD136XG

- EasyFix® system
- Hidden aerator 5l/min
- FirmaFlow® ceramic disc cartridge 28mm
- Temperature limiter
- Supplied with flexible hoses G3/8 PEX
- Comfort area: Height 75mm

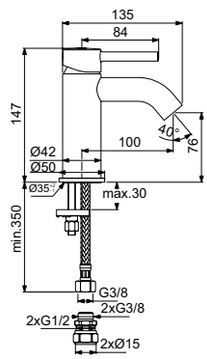

VESSEL BASIN MIXER

MODEL	SKU
Single lever vessel basin mixer	BD365XG

- EasyFix® system
- Hidden aerator 5l/min
- FirmaFlow® ceramic disc cartridge 28mm
- Temperature limiter
- With shaft screw connection
- Supplied with flexible hoses G3/8 PEX
- Comfort area: Height 250mm
- BD137XG to be used only in combination with washbasins with overflow

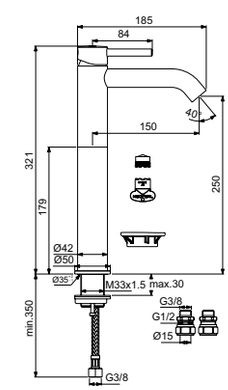

BUILT-IN BASIN MIXER KIT2

MODEL	SKU
Single lever wall mounted basin mixer, 180mm tubular spout	A6938XG

- Hidden aerator
- Kit 1 to be purchased separately (A1313NU)

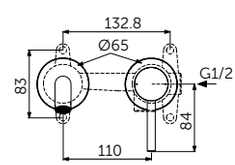

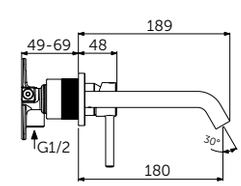

EasyFix Water saving Light-Move

BATH FILLER

MODEL	SKU
Dual control bath filler	BC188XG

- 1/2 Ceramic disc valves
- Suitable for Low pressure

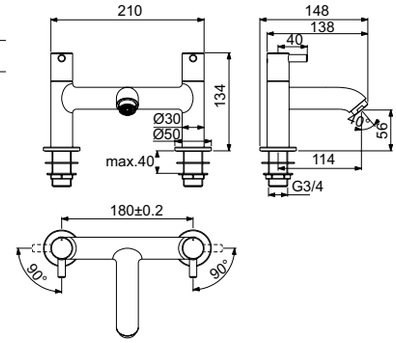

BATH SHOWER MIXER

MODEL	SKU
Dual control bath & shower mixer	BC189XG

- 1/2 Ceramic disc valves
- Diverter
- Suitable for Low pressure
- Shower set: stick hand shower, metal wall bracket, shower hose

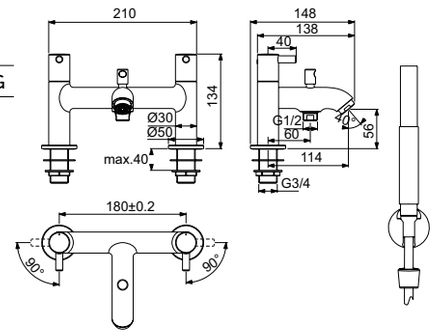

BIDET MIXER

MODEL	SKU
Single lever bidet mixer with metal pop-up waste	BC197XG

- EasyFix® system
- Ball joint aerator 5l/min
- FirmaFlow® ceramic disc cartridge 28mm
- Temperature limiter
- Supplied with flexible hoses G3/8 PEX

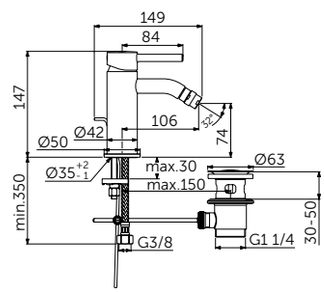

EasyFix Water saving Light-Move

MINI BASIN MIXER

MODEL	SKU
Single lever mini basin mixer	BC722XG

- EasyFix® system
- Slim aerator
- FirmaFlow® ceramic disc cartridge 28mm
- Temperature limiter
- Supplied with flexible hoses
- Comfort area: Height 80mm

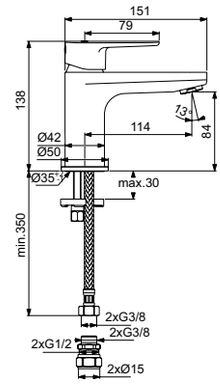

BASIN MIXER

MODEL	SKU
Single lever basin mixer	BC724XG

- EasyFix® system
- Slim aerator 5l/min
- FirmaFlow® ceramic disc cartridge 28mm
- Temperature limiter
- Supplied with flexible hoses G3/8 PEX
- Comfort area: Height 120mm
- BD131XG to be used only in combination with washbasins with overflow

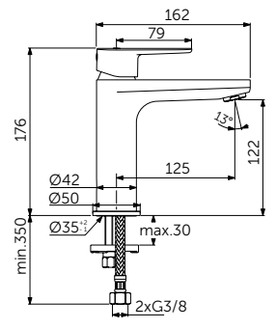

BUILT-IN BASIN MIXER KIT2

MODEL	SKU
Single lever wall mounted basin mixer, 224mm cast spout	BD133XG

- Kit 2
- Metal escutcheon
- Metal handle with printed red and blue colour indication
- Slim aerator 5l/min
- To be used only in combination with A1313NU Kit – to be purchased separately

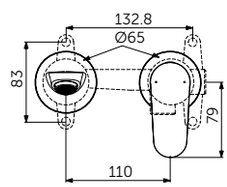

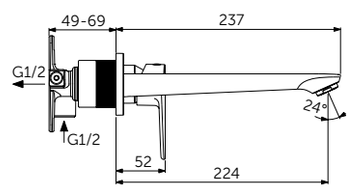

DUAL CONTROL BATH FILLER

MODEL	SKU
Bath filler	BC707XG

- 3/4 Ceramic disc valves
- Suitable for Low pressure

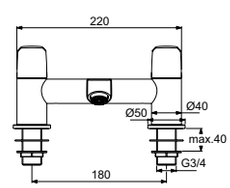

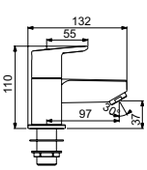

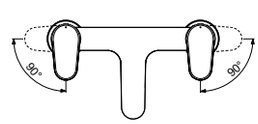

EasyFix Water saving Light-Move

BATH SHOWER MIXER

MODEL	SKU
Dual control bath & shower mixer	BC708XG

- 3/4 Ceramic disc valves
- Diverter
- Suitable for Low pressure
- Shower set: round hand shower, metal wall bracket, shower hose

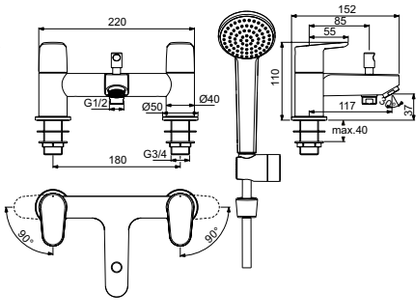

BIDET MIXER

MODEL	SKU
Single Lever bidet mixer with metal pop-up waste	BC705XG

- EasyFix® system
- Ball joint aerator 5l/min
- FirmaFlow® ceramic disc cartridge 28mm
- Temperature limiter
- Supplied with flexible hoses G3/8 PEX

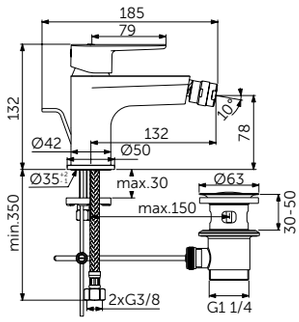

FREESTANDING BATH & SHOWER MIXER

MODEL	SKU
Single lever freestanding bath & shower mixer	A6347XG

- Adjustable aerator
- FirmaFlow® ceramic disc cartridge 38mm
- Temperature limiter
- Shower set with 1 function stick hand spray, metal wall bracket and shower hose
- Floor fixing kit A6133NU to be purchased seperatley

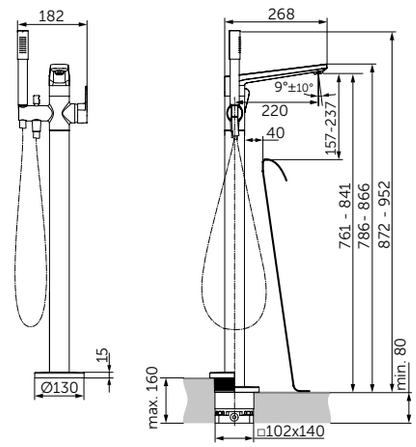

EasyFix Water saving Light-Move

Basins, Toilets and Furniture

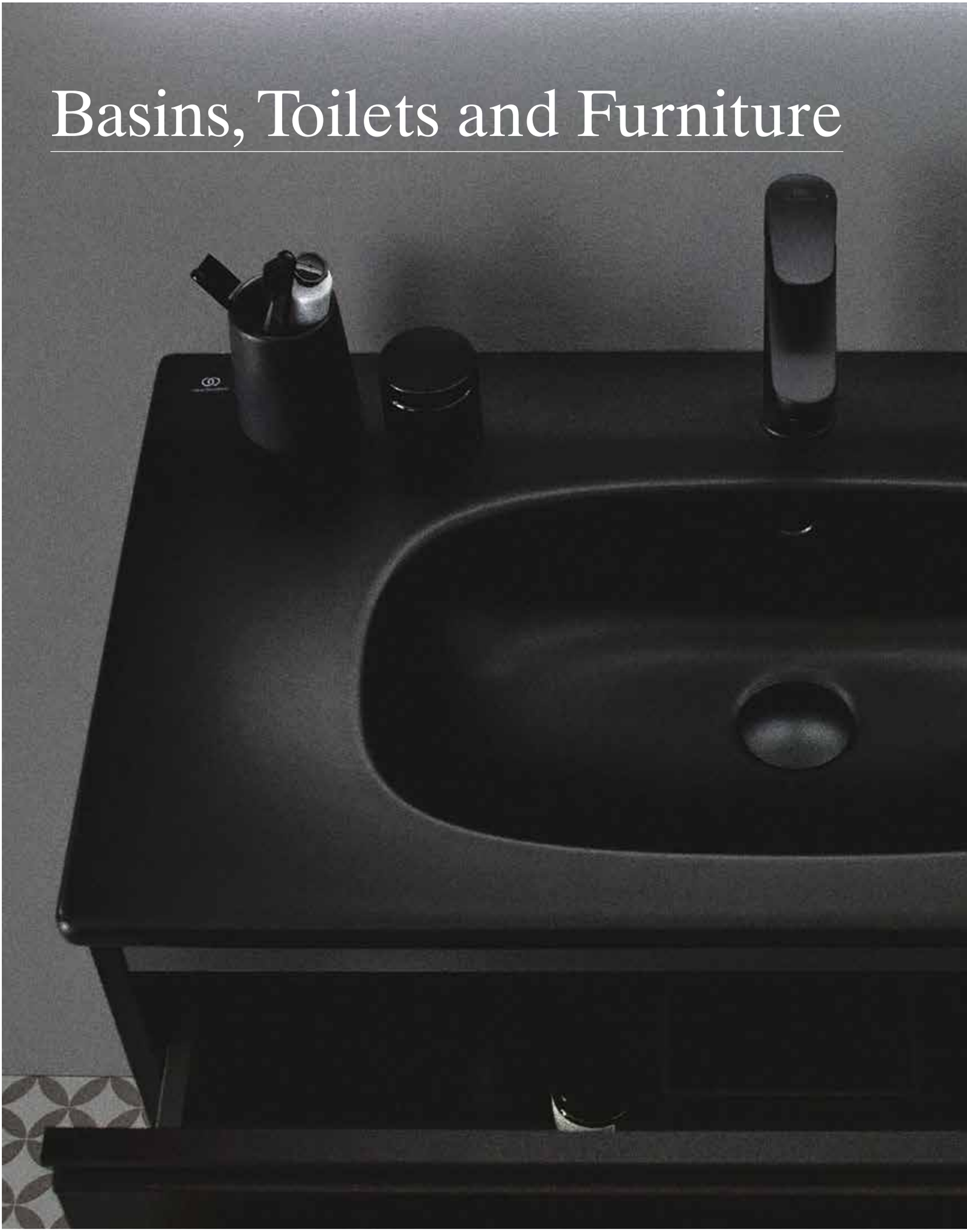

CLOSE YOUR EYES AND IMAGINE YOUR PERFECT BATHROOM. WHETHER IT'S BOLD OR MINIMALISTIC, YOU'VE GOT THE FREEDOM TO CREATE IT.

Tesi

CLASS AND ELEGANCE RE-INVENTED

With a slender form, this classic collection effortlessly integrates itself into any bathroom style. The adaptable look and characteristic curves blend into your space fluidly. The silk black makeover gives the products a contemporary twist, which makes them a bolder design statement that adds an air of sophistication. Featuring our innovative AquaBlade® technology, Tesi creates a seamless synergy of functional perfection and aesthetic beauty.

Tesi Wall-Hung Toilet AquaBlade - T3546V3
Tesi Slim Seat & Cover, Slow Close - T3527V3
Tesi Wall-Hung Bidet - T3552V3
Cerafine O Bidet Mixer - BC705XG
Altes Flush Plate - Black Ceramic - R0130A6
IOM Towel Rail 45cm - A9117XG

AquaBlade® TECHNOLOGY

AquaBlade® is the greatest innovation since the flush. Cleaner, quieter and smarter, it delivers superior, splash-free flushing, even at low water volumes. For spaces where hygiene is key, and for washrooms where first impressions are essential, AquaBlade® delivers new standards in design, engineering and performance.

Wall-hung bowl

Wall-hung bidet

Floorstanding Back-To-Wall Bowl

Floorstanding Back-To-Wall Bidet

Vanity and Basin Unit

Connect Air

A VERSATILE RANGE WITH SUBTLE TOUCHES

Combining fine edges, and slim, tapering profiles, Connect Air is perfect for any contemporary home. This range is extremely versatile and is made with an almost weightless beauty, to elegantly breathe new life into your bathroom.

The collection was created exclusively for Ideal Standard by Robin Levien – Royal Designer for Industry. The black colour and silky, soft finish make it the next generation in bathroom beauty.

OUR SELECTION

Cerafine O
Grande Basin Mixer - BC724XG
Connect Air Vanity 80cm - E0279V3
Tesi Basin Unit 80cm - T0051ZT
Mirror with Light 80cm - T3351BH

Wall-hung bowl

Wall-hung bidet

Cube Basin

Hand Wash Basin

Vanity*

*Compatible with Tesi basin unit.
Matching Connect Air furniture
will be available later in 2021.

VANITY 825 MM

MODEL	SKU
Vanity 825 mm	T3509V3

- Tap hole
- Overflow
- Wall mounted installation
- Compatible with Tesi basin unit 800mm T0051ZT (to be purchased separately)

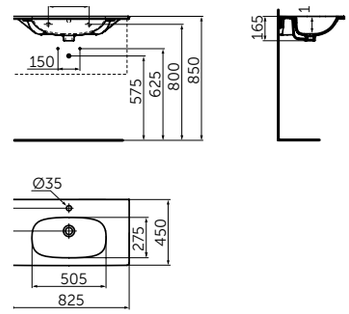

VANITY 625 MM

MODEL	SKU
Vanity 625 mm	T3510V3

- Tap hole
- Overflow
- Wall mounted installation
- Compatible with Tesi basin unit 600mm T0050ZT (to be purchased separately)

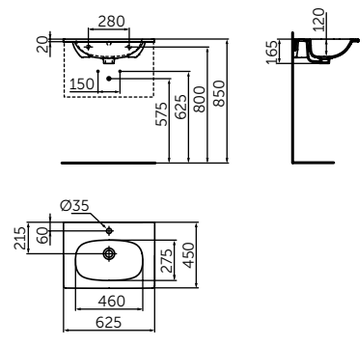

BASIN UNIT 800 MM

MODEL	SKU
Basin unit 800 mm	T0051ZT

- 2 adjustable drawers with soft closing system
- Built-in handle
- Recommended Space Saving siphon EE23033967
- For use with Tesi (T3509V3) and Connect Air (E0279V3) vanities (to be purchased separately)

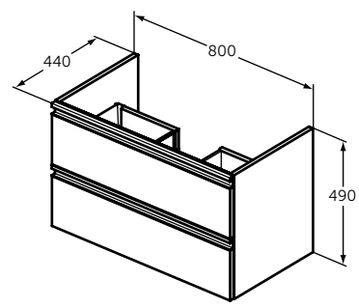

BASIN UNIT 600 MM

MODEL	SKU
Basin unit 600 mm	T0050ZT

- 2 adjustable drawers with soft closing system
- Built-in handle
- Recommended Space Saving siphon EE23033967
- For use with Tesi (T3510V3) and Connect Air (E0289V3) vanities (to be purchased separately)

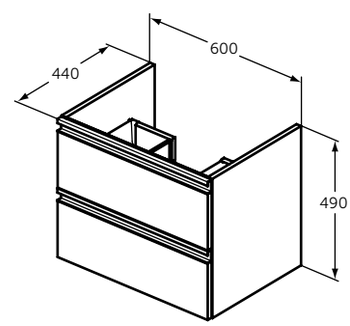

WALL-HUNG BOWL - AQUABLADE® TECHNOLOGY

MODEL	SKU
Wall-hung bowl - AquaBlade® technology	T0079V3

- AquaBlade® flushing technology
- Fully hidden wall fixation
- Low flushing 4,5/3 litres
- T0079V3 model: compatible with slim sandwich seat T3527V3 (to be purchased separately)

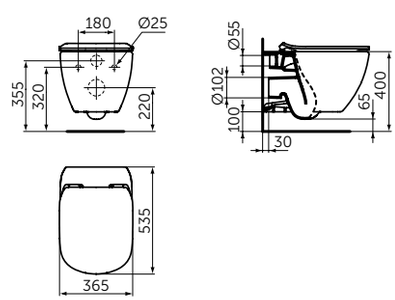

Soft Closing

AquaBlade

Hidden Fixations

FLOORSTANDING BACK-TO-WALL BOWL - AQUABLADE TECHNOLOGY

MODEL	SKU
Floorstanding back-to-wall - AquaBlade® technology	T0077V3

- AquaBlade® flushing technology
- Low flushing 4,5/3 litres
- T0077V3 model: compatible with slim sandwich seat T3527V3 (to be purchased separately)

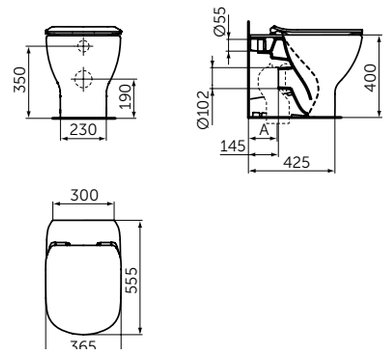

SLIM SANDWICH SEAT

MODEL	SKU
Slim sandwich seat	T3527V3

- Soft closing
- Easy removable seat

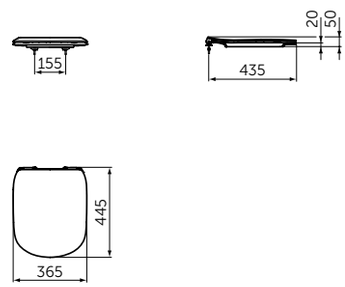

WALL-HUNG BIDET

MODEL	SKU
Wall-hung bidet	T3552V3

- Standard overflow
- Tap hole
- Fully hidden wall fixation

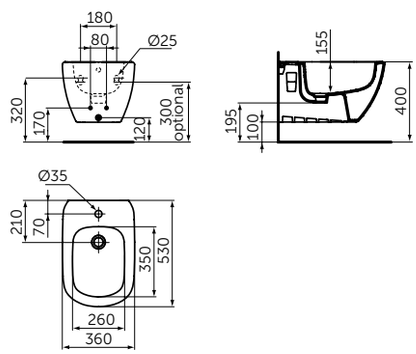

FLOORSTANDING BACK-TO-WALL BIDET

MODEL	SKU
Floorstanding back-to-wall bidet	T3540V3

- Standard overflow
- Tap hole

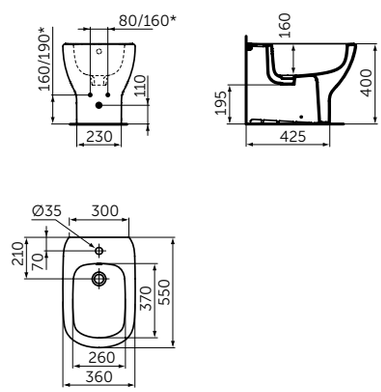

Aqua Blade | Hidden fixations | Easy take off | Soft closing

VANITY 840 MM

MODEL	SKU
Vanity 840 mm	E0279V3

- Tap hole
- Overflow
- Wall mounted installation
- Compatible with Tesi basin unit 800mm T0051ZT (to be purchased separately)

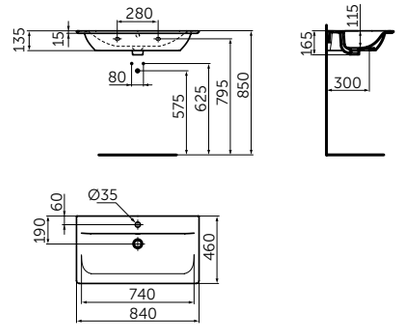

VANITY 640 MM

MODEL	SKU
Vanity 640 mm	E0289V3

- Tap hole
- Overflow
- Wall mounted installation
- Compatible with Tesi basin unit 600mm T0050ZT (to be purchased separately)

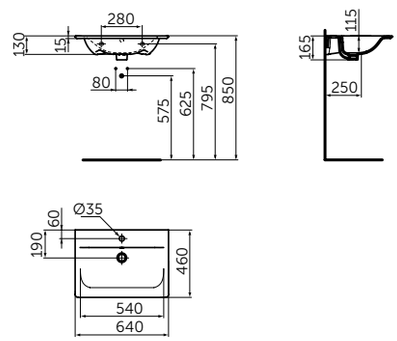

CUBE BASIN 600 MM

MODEL	SKU
Cube basin 600 mm	E0298V3

- Tap hole
- Overflow
- Wall mounted installation

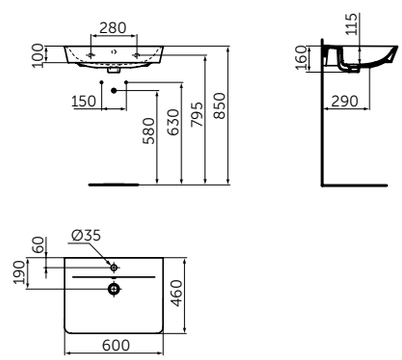

CUBE HAND WASH BASIN 400 MM

MODEL	SKU
Cube hand wash basin 400 mm	E0307V3

- Tap hole
- Overflow
- Wall mounted installation

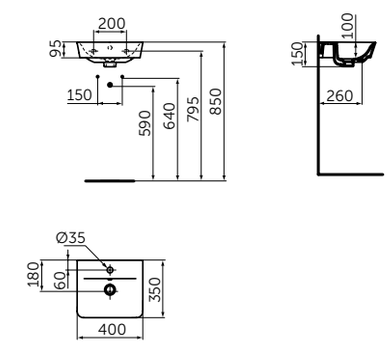

*Connect Air products in silk black will be available as of September 2021.

WALL-HUNG BOWL - AQUABLADE® TECHNOLOGY

MODEL	SKU
Wall-hung bowl - AquaBlade® technology	E0054V3

- AquaBlade® flushing technology
- Fully hidden wall fixation
- Low flushing 4,5/3 litres
- Compatible with slim wrapover seat E0368V3 (to be purchased separately)

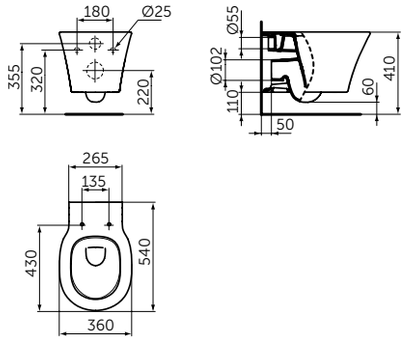

SLIM WRAPOVER SEAT

MODEL	SKU
Slim wrapover seat	E0368V3

- Soft closing
- Easy removable seat

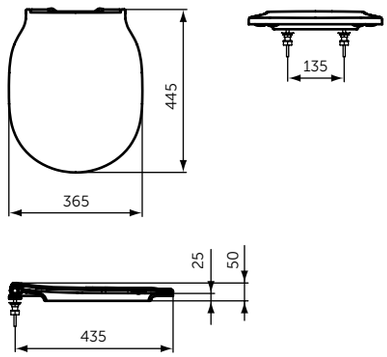

WALL-HUNG BIDET

MODEL	SKU
Wall-hung bidet	E0266V3

- Standard overflow
- Tap hole
- Fully hidden wall fixation

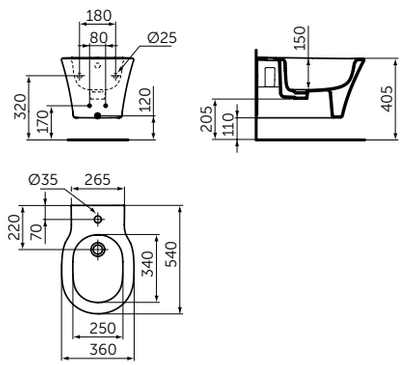

AquaBlade® | Hidden fixations | Flush 4.5 L | Easy take off | Soft closing

TOWEL RAIL

MODEL	SKU
Towel Rail	A9117XG

- W: 450 H: 48 D: 58mm
- Wall mounting

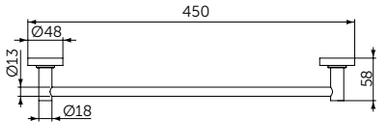

TOWEL HOOK

MODEL	SKU
Towel Hook	A9115XG

- W:48 H:48 D:45mm
- Wall mounting

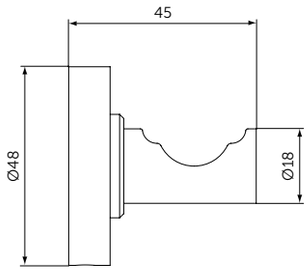

TOILET ROLL HOLDER

MODEL	SKU
Toilet Roll Holder	A9132XG

- W:48 H:147 D:59mm
- Wall mounting

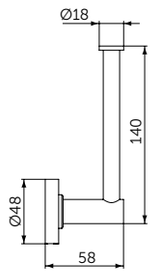

SOAP DISH & HOLDER

MODEL	SKU
Soap Dish & Holder	A9122XG

- W:114 H:48 D:127mm
- Frosted glass dish
- Wall mounting

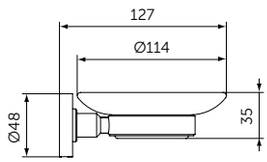

TUMBLER & HOLDER

MODEL	SKU
Tumbler & Holder	A9120XG

- W:66 H:96 D:103mm
- Frosted glass tumbler
- Wall mounting

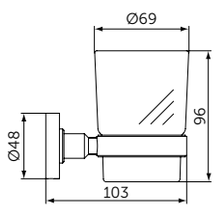

GLASS SHELF

MODEL	SKU
Glass Shelf	A9124XG

- W:520 H:48 D:138mm
- Frosted glass shelf
- Wall mounting

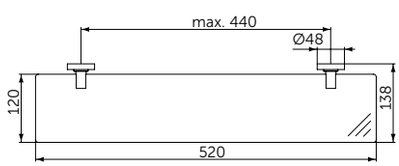

TOILET BRUSH & HOLDER

MODEL	SKU
Toilet Brush & Holder	A9119XG

- W:110 H:375 D:139mm
- Frosted glass holder
- Black brush head
- Wall mounting

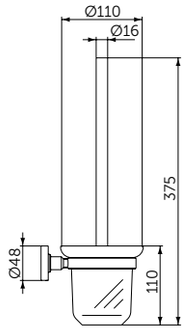

SHOWER BASKET

MODEL	SKU
Shower Basket	A9105XG

- W:211 H:44 D:127mm
- Wall mounting

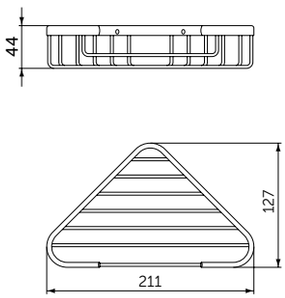

TOWEL RING

MODEL	SKU
Towel Ring	A9130XG

- W:159 H:183 D:58mm
- Wall mounting

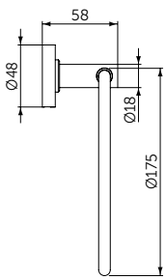

ACCESSORIES BUNDLE

MODEL	SKU
Accessories Bundle	A9246XG

- Toilet brush & holder A9119XG
- Toilet roll holder A9132XG
- Towel hook A9115XG

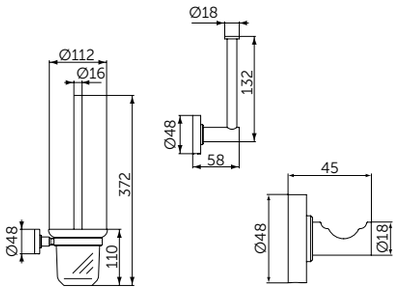

ACCESSORIES BUNDLE

MODEL	SKU
Accessories Bundle	A9245XG

- Toilet brush & holder A9119XG
- Tumbler & holder A9120XG
- Soap dish & holder A9122XG

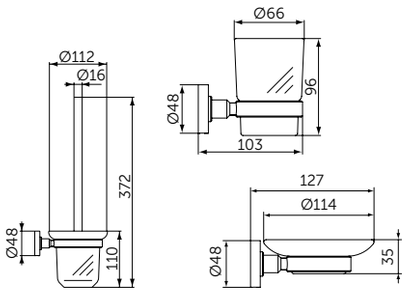

FREE FLOW WASTE

MODEL	SKU
Free flow waste	J3291XG

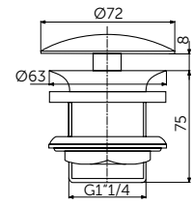

SLOTTED CLICKER WASTE

MODEL	SKU
Slotted clicker waste	E1482XG

- For basins with an overflow

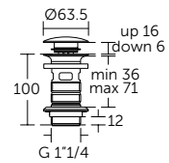

UNSLOTTED CLICKER WASTE

MODEL	SKU
Unslotted clicker waste	E1483XG

- For basins with no overflow

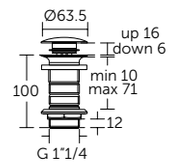

CONTEMPORARY BOTTLE TRAP

MODEL	SKU
Contemporary bottle trap	T4441XG

- 32 x 75mm

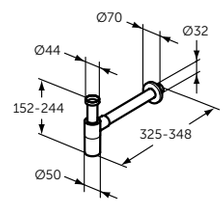

LUXURY CLICKER BATH WASTE & OVERFLOW

MODEL	SKU
Luxury clicker bath waste & overflow	E1484V3

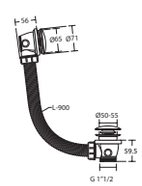

IDEALFILL CLICKER BATHFILL WASTE & OVERFLOW

MODEL	SKU
Idealfill clicker bathfill waste & overflow	E1488V3

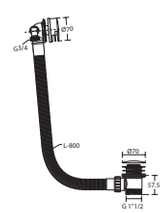

OLEAS™® M1

MODEL	SKU
Round Flush Plate	R0115A6

- Round design
- Dual flush
- Mechanical actuation
- Actuation force < 20N

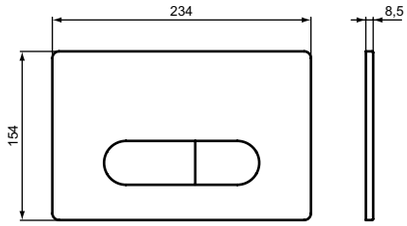

OLEAS™® M2

MODEL	SKU
Square Flush Plate	R0121A6

- Square design
- Dual flush
- Mechanical actuation
- Actuation force < 20N

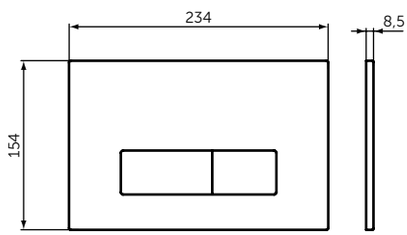

OLEAS™® M3

MODEL	SKU
Soft square Flush plate	R0123A6

- Soft-square design
- Dual flush
- Mechanical actuation
- Actuation force < 20N

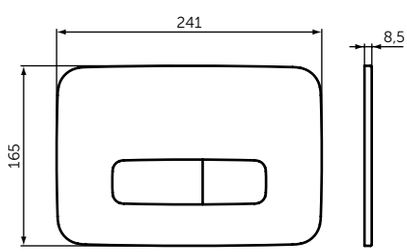

Dual Flush

Mechanical actuation

Showering

SHOWERING HAS BECOME PART OF OUR DAILY ROUTINE. WHETHER YOU SEE IT AS A PURELY FUNCTIONAL PROCESS OR YOU LIKE TO LAVISH IN THE EXPERIENCE, OUR WIDE SELECTION OF INNOVATIVE PRODUCTS WILL MEET ALL YOUR NEEDS.

Ceratherm T & Idealrain

MAKE YOUR SHOWER THE CENTREPIECE OF YOUR BATHROOM

Ceratherm T is an extensive range of thermostatic shower and bath mixers. Idealrain complements the collection with a wide choice of hand sprays, rain showers and showering accessories.

Ceratherm T100
Built-in 2 outlet Shower Mixer - A4814XG
Idealrain Hand Shower - BC774XG
Idealrain Shower Hose 125cm - A3306XG
Idealrain Hand Shower Support - BC807XG

Ceratherm T25
Exposed Shower System -
A7571XG

Round Built-In Thermostats

Square Built-In Thermostats

Exposed Thermostats

Round Rain Shower Head

Square Rain Shower Head

Round Hand Spray

Stick Hand Spray

Exposed Shower Systems

OUR SELECTION

Ceratherm T100 Built-in 2 outlet Shower Mixer - A4814XG
Idealrain Rainshower Round 300mm - A5803XG
Idealrain Hand Shower - BC774XG
Idealrain Shower Hose 125cm - A3306XG
Idealrain Hand Shower Support - BC807XG

FirmaFlow® Therm

POWERING THE EVERYDAY

Ideal Standard's shower solutions performs beautifully, because we design every model from the inside out. You can install with confidence and ease, while enjoying unrivalled levels of safety and performance. Our shower systems are fitted with FirmaFlow® Therm, the most durable thermostatic cartridge. The ergonomic design of our products delivers the perfect experience, day after day.

ECOFLOW REGULATOR

WATER IS A PRECIOUS RESOURCE.
SAVE WATER WITH ECOFLOW.

Ceratherm T thermostats feature an eco-setting, allowing you to limit flow up to 50% without any loss of performance. And our Idealrain handsprays are fitted with a flow restrictor (8L/min) to provide maximum water efficiency.

TEMPERATURE CONTROL

JUST RIGHT,
EVERY TIME.

Should the hot or cold water supply unexpectedly cut off, the water flow will stop automatically to protect from shocks and scalds. Only restarting, under complete control, when the water supply returns.

COOL BODY

COOL TO THE TOUCH.
PROTECT ALL USERS.

Cool Body technology ensures the hot water flow is always surrounded by cold water. So whatever your perfect temperature is, the Ceratherm T body stays cool to the touch at all times, giving total peace of mind, protecting users of all ages from scalding.

MAXIMUM SPRAY

MADE FOR MAXIMUM
COMFORT.

Idealrain delivers a personal shower experience. Large handsprays ensure maximum comfort and edge-to-edge nozzles are designed to create big indulgent downpours.

EASY CLEAN

PEACE OF MIND

Our shower head and hand showers feature soft rub-clean nozzles. They help reduce limescale and facilitate cleaning, creating a shower that will look good for a long time.

ROUND BUILT-IN THERMOSTATIC SHOWER MIXER - KIT 2

MODEL	SKU
Built-in thermostatic shower mixer without diverter	A5813XG

- Kit 1 A1000NU to be purchase separately
- IS Thermostatic cartridge
- Ceramic discs on/off valve 3/4" - 90°
- Metal handle with hot water stop button pre-fixed at 40°C
- Max. hot water temperature adjustable
- Escutcheon holder with integrated sealing
- Maximum flow rate at 3 bar - 26 l/min
- Comply with EN1111

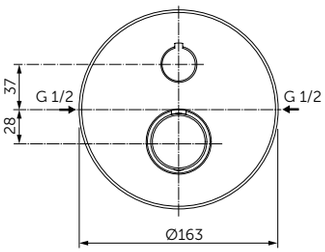

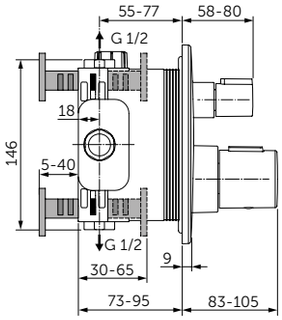

ROUND BUILT-IN THERMOSTATIC BATH AND SHOWER MIXER - KIT 2

MODEL	SKU
Built-in thermostatic bath and shower mixer with diverter	A5814XG

- Kit 1 A1000NU to be purchase separately
- IS Thermostatic cartridge
- Ceramic disc diverter - 180°
- Metal handle with hot water stop button pre-fixed at 40°C
- Max. hot water temperature adjustable
- Escutcheon holder with integrated sealing
- Maximum flow rate at 3 bar - 21 l/min
- Comply with EN1111

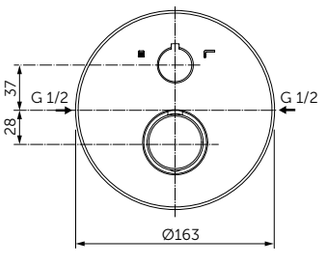

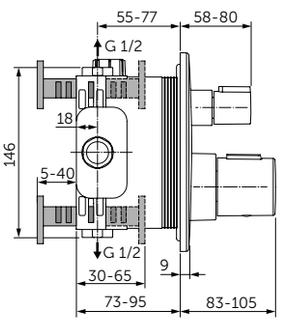

SQUARE BUILT-IN THERMOSTATIC SHOWER MIXER - KIT 2

MODEL	SKU
Built-in thermostatic shower mixer without diverter	A6956XG

- Kit 1 A1000NU to be purchase separately
- IS Thermostatic cartridge
- Ceramic discs on/off valve 3/4" - 90°
- Metal handle with hot water stop button pre-fixed at 40°C
- Max. hot water temperature adjustable
- Escutcheon holder with integrated sealing and possible angle adjustment
- Maximum flow rate at 3 bar - 26 l/min
- Comply with EN1111

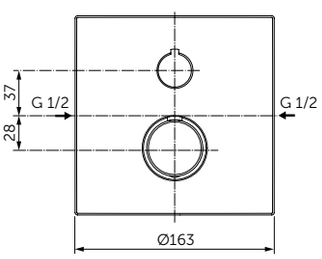

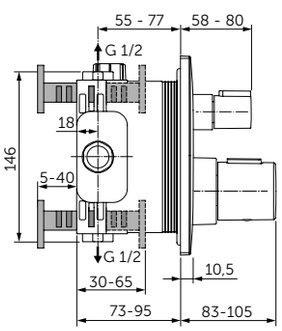

40 Degree Safety Button | Temperature Limit Stop | Water and Energy Saving | Metal Handle

SQUARE BUILT-IN THERMOSTATIC BATH AND SHOWER MIXER - KIT 2

MODEL	SKU
Built-in thermostatic bath and shower mixer with diverter	A7522XG

- Kit 1 A1000NU to be purchase separately
- IS Thermostatic cartridge
- Ceramic disc diverter - 180°
- Metal handle with hot water stop button pre-fixed at 40°C
- Max. hot water temperature adjustable
- Escutcheon holder with integrated sealing and possible angle adjustment
- Maximum flow rate at 3 bar - 21 l/min
- Comply with EN1111

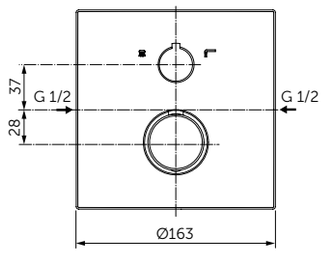

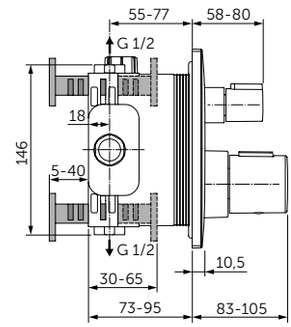

EXPOSED SHOWER SYSTEM

MODEL	SKU
Thermostatic mixer, round handspray & rainshower	A7571XG

- FirmaFlow® Therm - thermostatic cartridge
- Ceramic disc diverter integrated in the handle - 180°
- Cool body technology
- Hot water at 40°C stop button and 50% water volume stop button
- Shower head Ø200 mm, 12 l/min water flow limiter
- 100mm 1F Idealrain hand spray with 8l/min flow regulator
- Vertically adjustable wall bracket for easy installation
- Angle and heigth adjustable slider for hand spray on the rail
- 1750mm Idealflex shower hose
- Comply with EN 1111

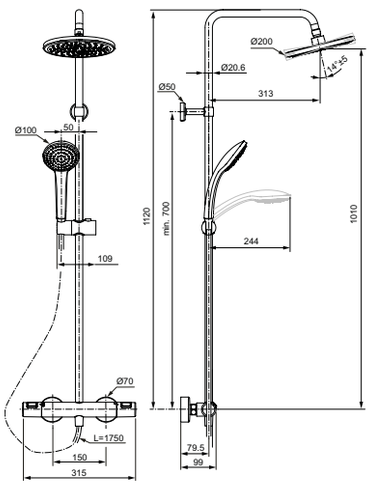

EXPOSED THERMOSTATIC SHOWER MIXER PACK

MODEL	SKU
Thermostatic shower mixer pack	A7569XG

- FirmaFlow® Therm - thermostatic cartridge
- Ceramic valve G1/2 180°
- Cool body technology
- Hot water at 40°C stop button and 50% water volume stop button
- Comply with EN 1111

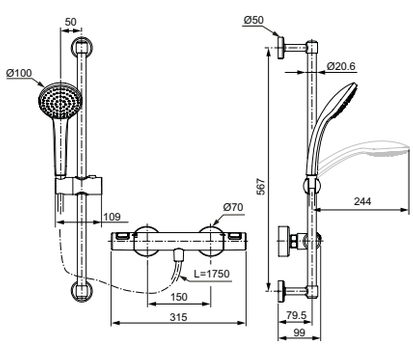

40 Degree Safety Button | Temperature Limit Stop | Water and Energy Saving | Metal Handle

SHOWER KIT

MODEL	SKU
Hand shower and sliding bar 600mm	BD142XG

- Ø 100 mm 1 function hand spray - rain (soft water spray)
- 600 mm Idealrain sliding bar
- Vertically adjustable wall bracket for easy installation
- Suitable for low and high pressure
- Limescale resistant with rub clean nozzles
- 8 litres per minute Eco flow regulator
- 1750mm Idealflex hose
- Angle and heigth adjustable slider for hand spray

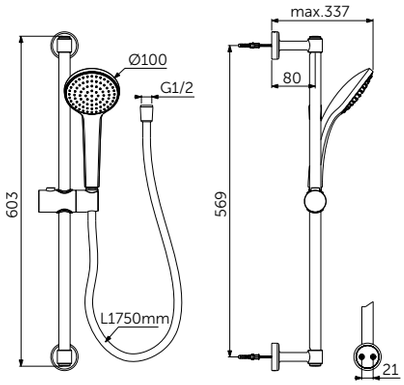

HAND SHOWER

MODEL	SKU
Ø 100m	B9402XG

- 1 function - rain (soft water spray)
- Suitable for low and high pressure
- Limescale resistant with rub clean nozzles
- G1/2" connector
- Removable 8 litres per minute Eco flow regulator

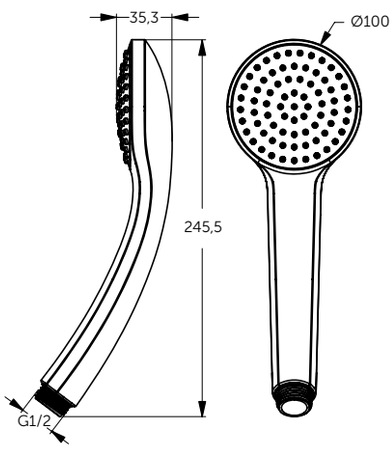

HAND SHOWER

MODEL	SKU
Stick	BC774XG

- Stick hand spray made of metal
- 1 function - normal spray (wide, rich jet)
- Limescale resistant with rub clean nozzles
- 8 l/min flow rate limit

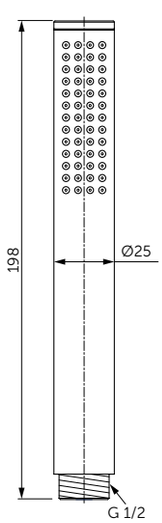

LightMove | Eco Flow Regulator | EasyClean Nozzles | IdealFlex | EasyMount

SHOWER HOSE

MODEL	SKU
1250mm	A3306XG
1750mm	A4109XG

- Reduces limescale and facilitate cleaning
- Connical nuts with G1/2" connectors
- Anti-Twist
- Strong - support up to 50kg
- Resists up to 5 bar constant flow pressure

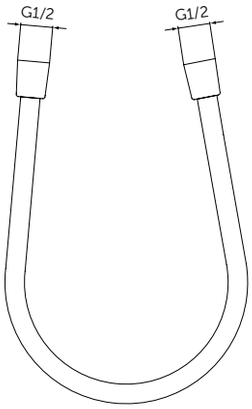

ROUND RAINSHOWER

MODEL	SKU
Ø200mm	BD140XG

- Suitable for low or high pressure
- 12 litres per minute Eco flow regulator
- Rub clean nozzles for protection against lime scale
- Can be used with a horizontal wall arm (B9445XG) or a vertical ceiling arm (B9446XG)
- ABS material

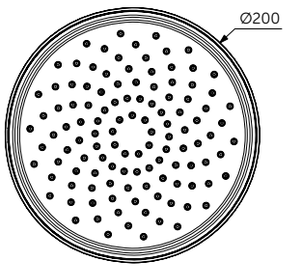

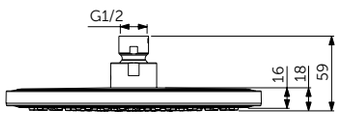

ROUND RAINSHOWER

MODEL	SKU
Ø300mm	A5803XG

- Made of metal
- Suitable for low or high pressure
- Removable 12 litres per minute Eco flow regulator
- Rub clean nozzles for protection against lime scale
- Can be used with a horizontal wall arm (B9445XG) or a vertical ceiling arm (B9446XG)

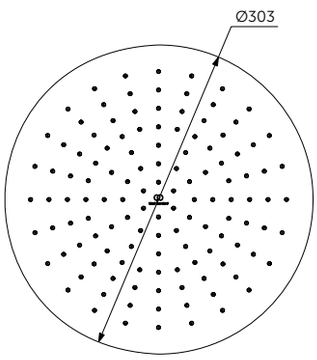

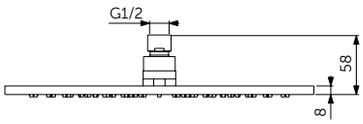

Swivel Arm Shower

Large Showering Area

EasyMount

SQUARE RAINSHOWER

MODEL	SKU
200x200mm	B0024XG

- Made of metal
- Suitable for low or high pressure
- Removable 12 litres per minute Eco flow regulator
- Rub clean nozzles for protection against lime scale
- Can be used with a horizontal wall arm (B9445XG) or a vertical ceiling arm (B9446XG)

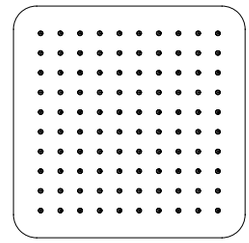

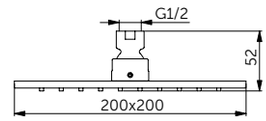

WALL CONNECTION

MODEL	SKU
400mm	B9445XG

- Wall connection - 400 mm
- For head shower
- Metal escutcheon
- G1/2" connector

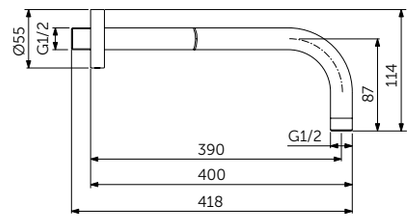

CEILING CONNECTION

MODEL	SKU
150mm	B9446XG

- Ceiling connection - 150 mm
- For head shower
- Metal escutcheon
- G1/2" connector

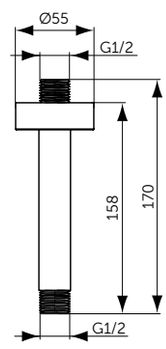

EasyClean Nozzles

Metal Hand Spray

WALL ELBOW

MODEL	SKU
Wall elbow	BC808XG

- Made of metal
- G1/2" connection with back flow prevention

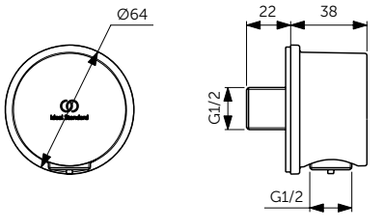

HAND SHOWER SUPPORT

MODEL	SKU
Hand shower support	BC806XG

- Made of metal with plastic insert to protect surface
- For hose with connical nuts

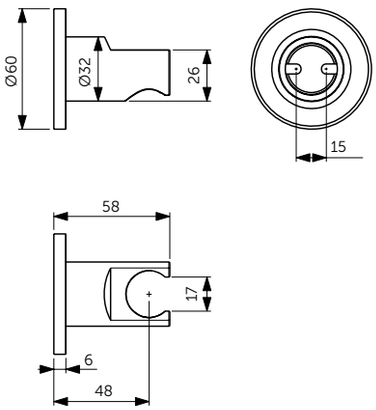

HAND SHOWER SUPPORT

MODEL	SKU
Hand shower support	BC807XG

- Made of metal with plastic insert to protect surface
- For hose with connical nuts
- G1/2" connection with back flow prevention

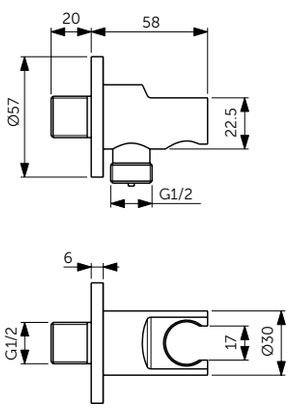

Universal Connection

OUR SELECTION

Idealrain Rainshower Round 300mm - A5803XG
Ultra Flat S Shower Tray Jet Black 160x90cm - K8277FV
Ultra Flat S Waste Cover Jet Black - KV169FV
Ceratherm T100 Built-in 2 Outlet Shower Mixer - A5814XG
Idealrain Hand Shower - BC774XG
Idealrain Shower Hose 125cm - A3306XG
Idealrain Hand Shower Support - BC807XG

Ultra Flat S

A TOUCH OF CLASS

Give your shower a touch of class and personality with something a little out of the ordinary. Elegant and contemporary, these shower trays can help you add a subtle, yet distinctive look to your bathroom thanks to the stone like effect. Choose between jet black and pure white for a modern monochromatic look. Ultra Flat S shower trays are bacterial resistant and are made with an anti-slip material, so you can relax and enjoy your shower. The flat appearance of the shower tray will give your bathroom the seamless look of a wet room and also allows for water to run away easily.

3 SHAPES
25 SIZES
30 MM ONLY

SQUARE

MODEL	SKU
1000mm square	K8216**
900mm square	K8215**
800mm square	K8214**

** Jet Black (FV) Pure White (FR)

- Low profile 30mm height
- Matt stone effect
- Antislip (DIN Class C)
- Bacterial Resistant
- Matching or contrasting Black or white waste covers available separately
- Can be installed flush with the floor for level access
- Compatible with our Ideal Standard 90mm fast flow waste (L6307AA) which is sold separately.

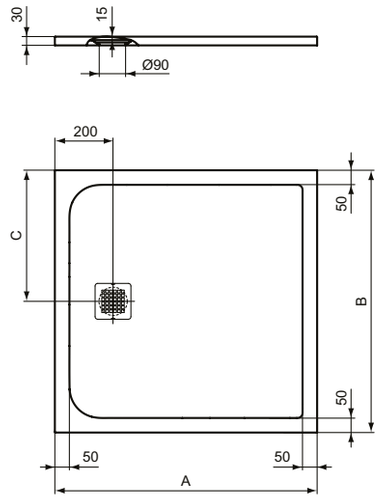

	A	B	C
K8214	800	800	400
K8215	900	900	450
K8216	1000	1000	500

RECTANGULAR

MODEL	SKU
900 x 700mm	K8190**
1000 x 700mm	K8218**
1000 x 800mm	K8219**
1000 x 900mm	K8220**
1200 x 700mm	K8221**
1200 x 800mm	K8227**
1200 x 900mm	K8230**
1200 x 1000mm	K8232**
1400 x 700mm	K8234**
1400 x 800mm	K8237**
1400 x 900mm	K8256**
1600 x 800mm	K8276**
1600 x 900mm	K8277**
1600 x 1000mm	K8319**

** Jet Black (FV) Pure White (FR)

- Low profile 30mm height
- Matt stone effect
- Antislip (DIN Class C)
- Bacterial Resistant
- Matching or contrasting Black or white waste covers available separately
- Can be installed flush with the floor for level access
- Compatible with our Ideal Standard 90mm fast flow waste (L6307AA) which is sold separately.

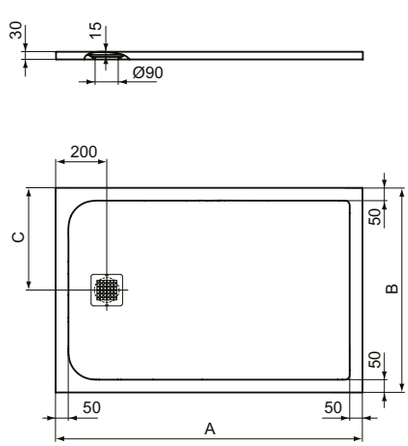

	A	B	C
K8190	900	700	350
K8218	1000	700	350
K8219	1000	800	400
K8220	1000	900	450
K8221	1200	700	350
K8227	1200	800	400
K8230	1200	900	450
K8232	1200	1000	500
K8234	1400	700	350
K8237	1400	800	400
K8256	1400	900	450
K8276	1600	800	400
K8277	1600	900	450
K8319	1600	1000	500

Low height makes it more accessible and also reduces the risk of tripping.

Height of 30mm.

Detergent resistant to European Standard 14527.

Light resistant to prevent discolouring (EN ISO 4892).

BATH SIZE

MODEL	SKU
1700 x 900mm	K8285**
1700 x 800mm	K8284**
1700 x 700mm	K8281**
1800 x 800mm	K8304**
1800 x 900mm	K8306**
1800 x 1000mm	K8320**
2000 x 900mm	K8343**
2000 x 1000mm	K8327**

** Jet Black (FV) Pure White (FR)

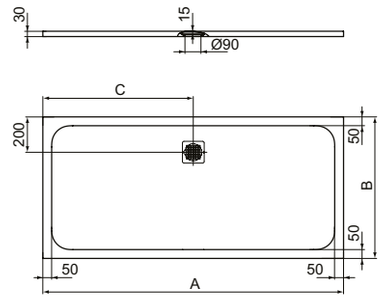

	A	B	C
K8281	1700	700	850
K8284	1700	800	850
K8285	1700	900	850
K8304	1800	800	900
K8306	1800	900	900
K8320	1800	1000	900
K8343	2000	900	1000
K8327	2000	1000	1000

- Low profile 30mm height
- Matt stone effect
- Antislip (DIN Class C)
- Bacterial Resistant
- Matching or contrasting Black or white waste covers available separately
- Can be installed flush with the floor for level access
- Compatible with our Ideal Standard 90mm fast flow waste (L6307AA) which is sold separately.

WASTE AND WASTE COVERS

MODEL	SKU
90mm Waste	L6307AA

MODEL	SKU
Waste cover, jet black	KV169FV

MODEL	SKU
Waste cover, pure white	KV169FR

Antislip

Bacterial Resistent

Connect 2

MADE FOR EVERYDAY LIVING

These sleek, contemporary shower enclosures are designed to look and feel sensational. Made with the best, to give you the best, the Connect 2 collection is the perfect finishing touch to our range of showering products.

Pivot

Slider

Radius Bathscreen

Angle Bathscreen

Ultra Flat S Shower Tray Jet Black 80x80cm - K8214FV
Ultra Flat S Waste Cover Jet Black - KV169FV
Connect 2 Pivot Door 80cm - K9392V3
Connect 2 Side Panel 80cm - K9415V3
Ceratherm T25 Exposed Shower System - A7571XG

CORNER INSTALLATIONS

Pivot door with side panel
These doors swing open to offer wide access, which when combined with a side panel creates a light and airy showering area.

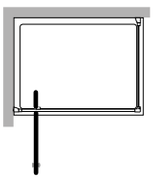

Sliding Door with side panel
Sliding doors offer maximum access where there is limited space to open a door. They can also work well in larger spaces to create luxurious showering areas.

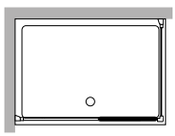

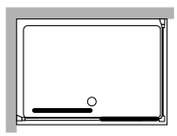

ALCOVE INSTALLATIONS

Sliding door
Sliding doors are a practical solution for alcoves, especially larger spaces. The door glides on smooth running wheels for access.

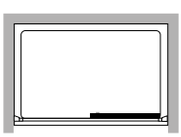

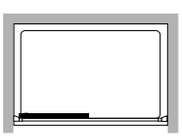

Pivot door
These doors work well in alcoves allowing the maximum showering area combined with the maximum access.

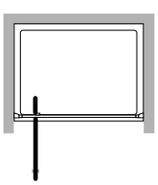

PIVOT DOORS – ALCOVE INSTALLATION

MODEL	SKU
Pivot Door 800mm	K9392V3
Pivot Door 900mm	K9393V3

- Height 1950mm
- 6mm clear safety glass
- Solid metal double handle
- Concealed fixings with easy click covers & top caps
- Suitable for installation on a tray or wetroom floor
- Horizontal adjustment up to 25mm per profile
- Complimenting black seals

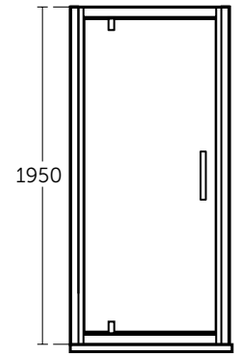

Pivot Door	A (mm)	B (mm)	D (mm)
800	750-800	500	517
900	850-900	550	567

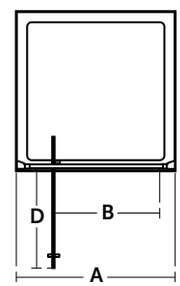

PIVOT DOOR – CORNER INSTALLATION WITH SIDE PANELS

MODEL	SKU
Pivot Door 800mm	K9392V3
Pivot Door 900mm	K9393V3
Side Panel 800mm	K9415V3
Side Panel 900mm	K9416V3

- Height 1950mm
- 6mm clear safety glass
- Solid metal double handle
- Concealed fixings with easy click covers & top caps
- Suitable for installation on a tray or wetroom floor
- Horizontal adjustment up to 25mm per profile
- Reversible for both left and right hand fitting
- Complimenting black seals

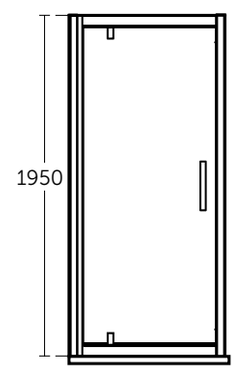

Pivot Door	A (mm)	B (mm)	D (mm)
800	750-800	500	517
900	850-900	550	567

Panel	C (mm)
800	755-805
900	855-905

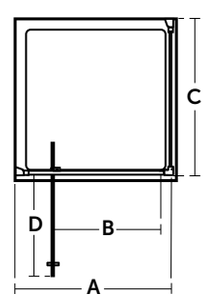

6mm Glass Thickness

Idealclean

Click And Clean

25mm Horizontal Adjustment

SLIDER DOOR - ALCOVE INSTALLATION

MODEL	SKU
Slider Door 1000mm	K9394V3
Slider Door 1200mm	K9396V3

- Height 1950mm
- 6mm clear safety glass
- Solid metal double handle
- Concealed fixings with easy click covers & top caps
- Suitable for installation on a tray or wetroom floor
- Horizontal adjustment up to 25mm per profile
- Reversible for both left and right hand fitting
- Complimenting black seals

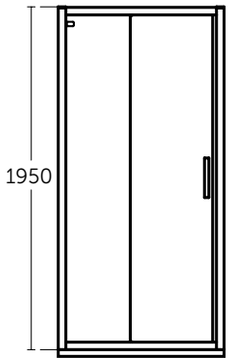

Pivot Door	A (mm)	B (mm)
1000	950-1000	357
1200	1150-1200	457

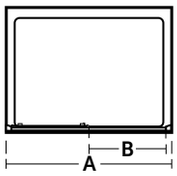

SLIDER DOOR - CORNER INSTALLATION WITH SIDE PANELS

MODEL	SKU
Slider Door 1000mm	K9394V3
Slider Door 1200mm	K9396V3
Side Panel 800mm	K9415V3
Side Panel 900mm	K9416V3

- Height 1950mm
- 6mm clear safety glass
- Solid metal double handle
- Concealed fixings with easy click covers & top caps
- Suitable for installation on a tray or wetroom floor
- Horizontal adjustment up to 25mm per profile
- Reversible for both left and right hand fitting
- Complimenting black seals

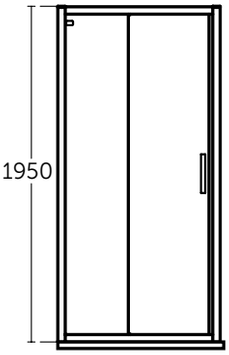

Pivot Door	A (mm)	B (mm)
1000	950-1000	357
1200	1150-1200	457

Panel	C (mm)
800	755-805
900	855-905

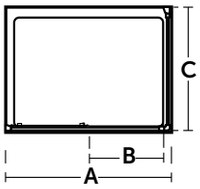

6mm Glass Thickness

Idealclean

Click And Clean

25mm Horizontal Adjustment

BATH SCREENS

MODEL	SKU
Radius Bath screen	T9924V3

- Height 1400mm
- Glass thickness 5mm
- Idealclean treatment
- Horizontal adjustment up to 20mm
- Reversible for both left and right hand fitting
- 180° opening, inwards and outwards
- Rise and fall for easy opening
- Concealed fixings with easy click covers & top caps
- Complimenting black seals

5mm GLASS | 20mm

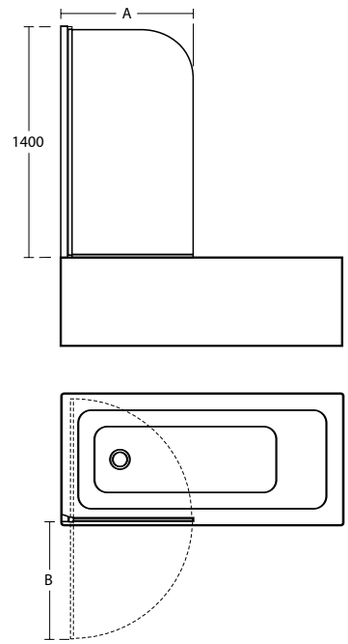

A	B
800-820	731

MODEL	SKU
Angle Bath screen	T9923V3

- Height 1400mm
- Glass thickness 5mm
- Idealclean treatment
- Horizontal adjustment up to 20mm
- Reversible for both left and right hand fitting
- 180° opening, inwards and outwards
- Rise and fall for easy opening
- Concealed fixings with easy click covers & top caps
- Complimenting black seals

5mm GLASS | 20mm

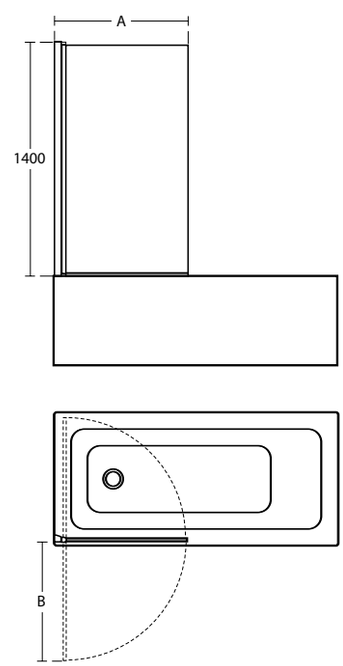

A	B
800-820	731

5mm GLASS — 5mm Glass Thickness

Idealclean

25mm — 25mm Horizontal Adjustment

CLASSICALLY CONTEMPORARY, OUR SILK BLACK COLLECTIONS OFFER YOU A CONTRAST FROM THE CONVENTIONAL GIVING YOU A SOPHISTICATED LOOK THAT YOU'LL LOVE SEEING DAY AFTER DAY. EFFORTLESSLY STYLISH, THIS SLEEK FINISH WILL ADD A SPECIAL TOUCH TO ANY ROOM.

Visit our website to discover more matching collections that will help you in bringing your design vision to life.

www.idealstandard.co.uk
www.idealstandard.ie

Ideal Standard have been producing bathrooms for more than 100 years. Intensive and continuous testing is the key to class-leading durability. Designed to endure the impact of daily use all of our products are guaranteed to perform stylishly and reliably, year after year. Our confidence in the quality and reliability of Ideal Standard products enables us to guarantee many of them for a lifetime. Our guarantee is offered on all products that have been used in the manner for which they were intended and does not apply to any products that have been misused or abused in any way. Products must be installed and cared for in line with our fixing instructions and local water by-laws. In the unlikely event the product fails within the guarantee period, we offer a free replacement or replacement part (or nearest equivalent). Liability is limited to individual products and does not cover consequential loss or damage on installation.

©Ideal Standard UK Ltd
P1921 02/20

Ideal Standard

Guarantee
For full conditions, please refer to our website:
www.idealspec.co.uk/support/guarantee.html

Ideal Standard (UK) Ltd.
The Bathroom Works
National Avenue
Kingston Upon Hull
HU5 4HS

Ideal Standard Ireland
2nd Floor, Unit 3103 Lake Drive
Citywest Business Campus
Tallaght
Dublin 24 YXW2

Ideal Standard

WWW.IDEALSTANDARD.CO.UK

WWW.IDEALSTANDARD.IE